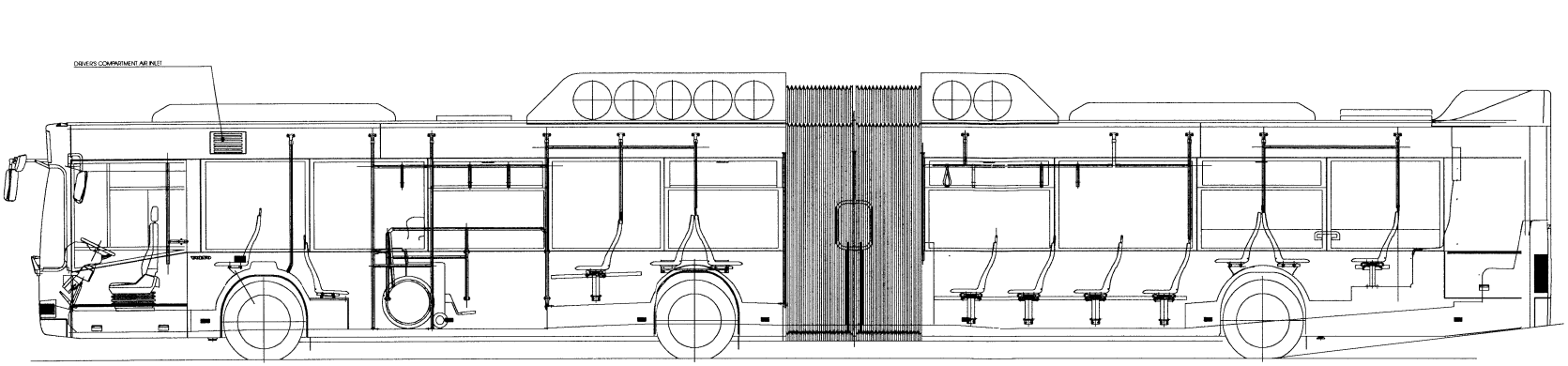


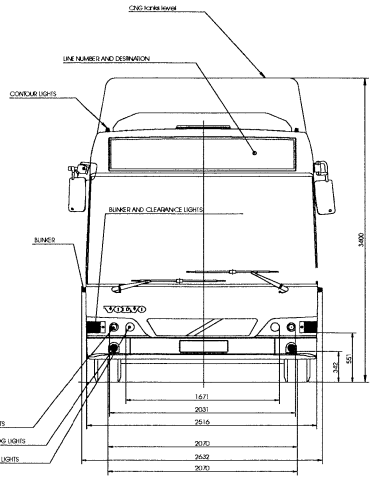


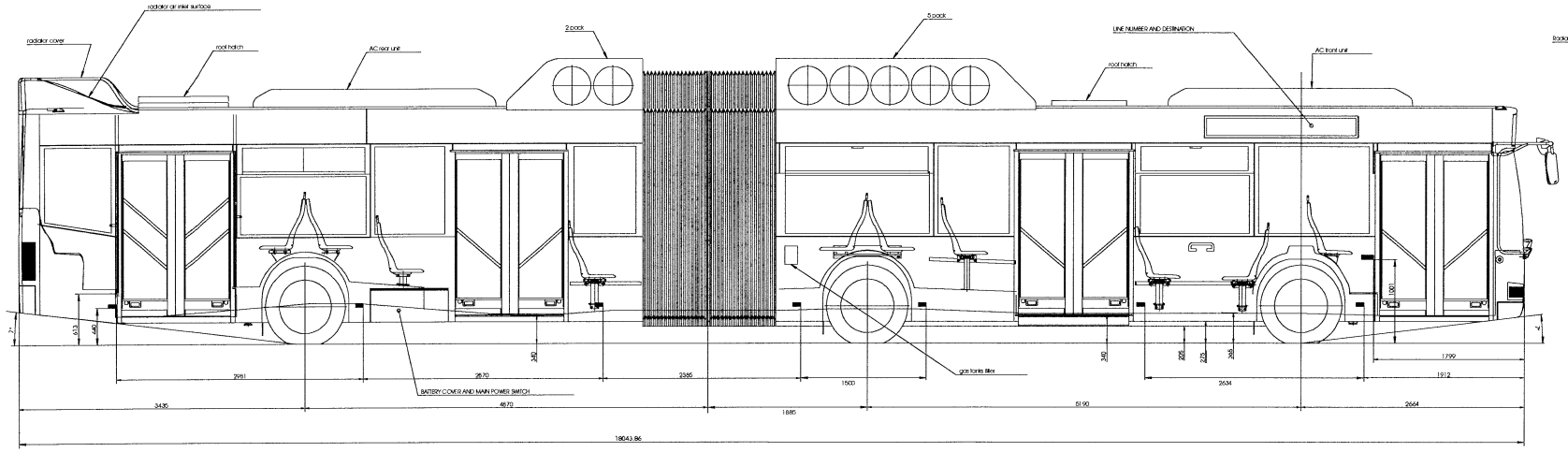


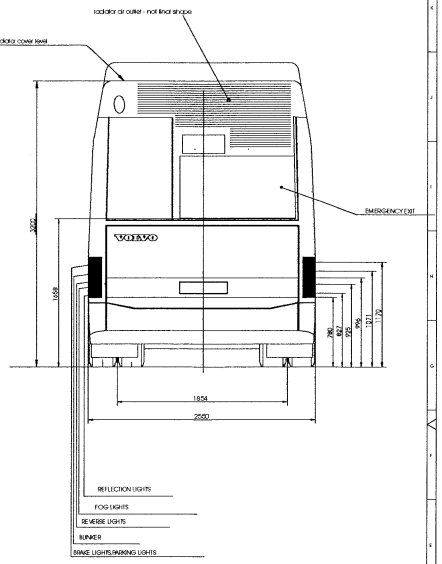


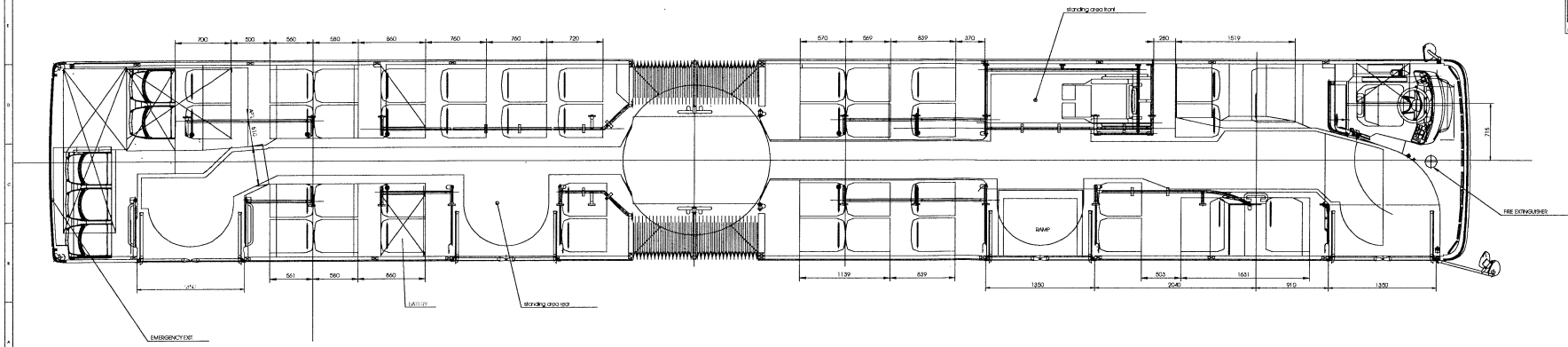


| | | | |
|---|---|---|---|
| DRAWN | | | |
| CHECKED | | | |
| APPROVED | | | |

SCALE 1:20

SYMBOLS, DESIGNATIONS AND GENERAL DRAWING METHODS
STD 5033,501

This copy is the property and subject of the Volvo or Volvo Group company which owns the copyright or other proprietary rights in the drawing. Without prior written permission, it may not be reproduced in any manner nor be disclosed to any third party nor used in any manner contrary to Volvo's interests.

VOLVO
Volvo Bus Corporation

Issue title: OFFER DRAWING
DI 7272 44+1
7702A
Issue subtitle: SUPPLEMENTARY DRAWING
Issue No: 01
Sheet No:
Issue date: 20584995