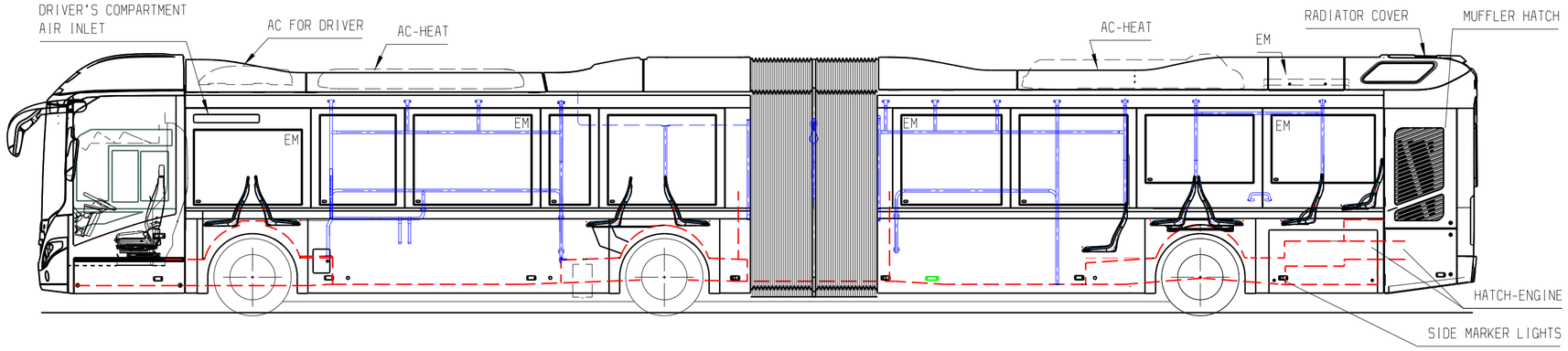

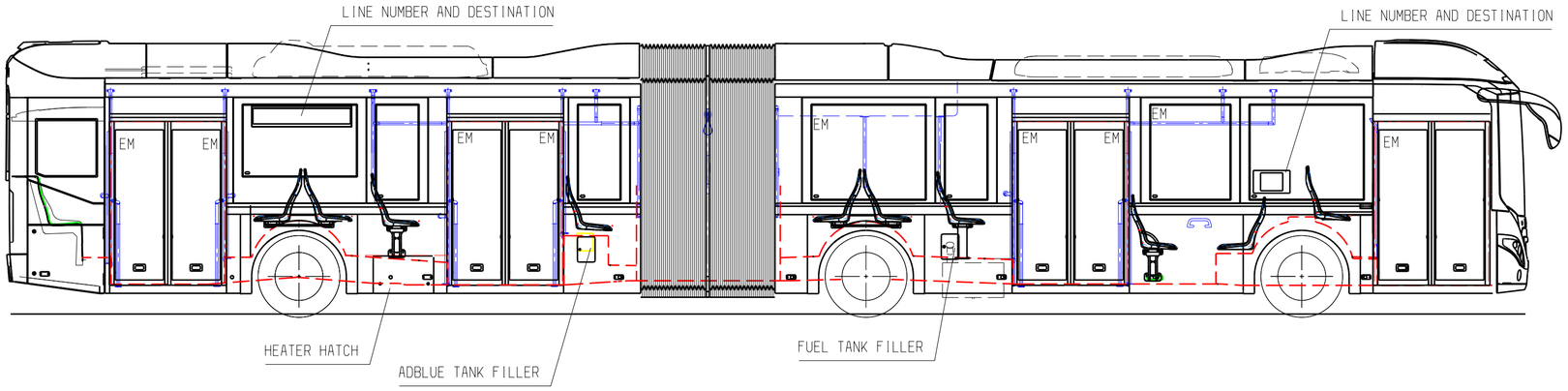

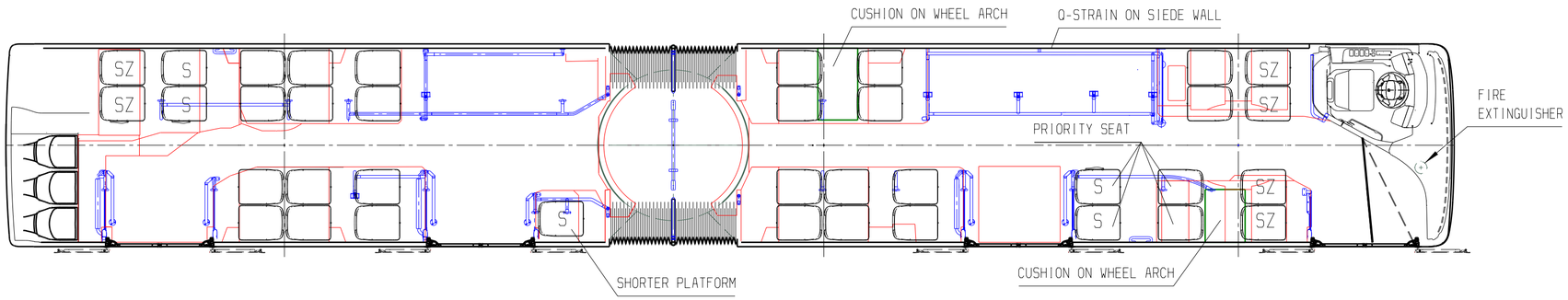

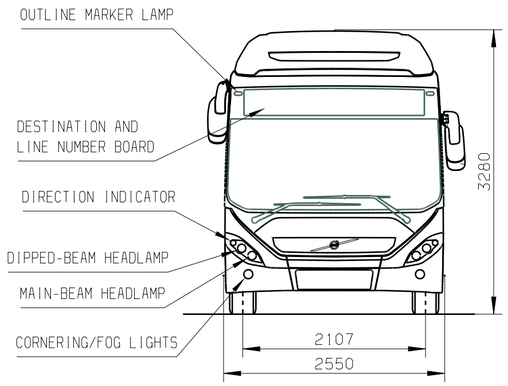

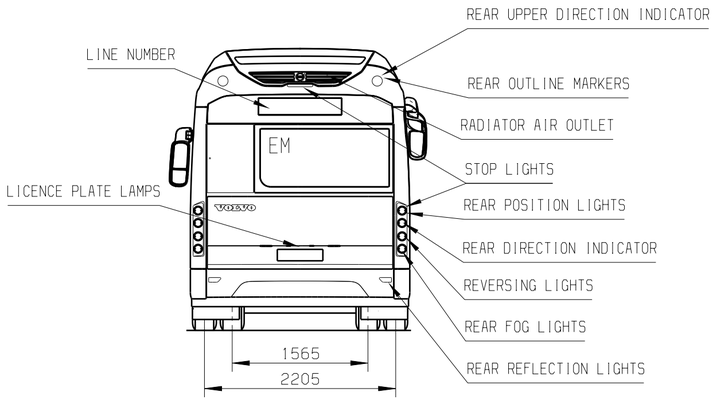

VOLVO
Volvo Bus Corporation

1999-10

VBC FORMAT A2 ISSUE 01